MIDI PATCH BAY BOARD ASSEMBLY MANUAL

ELECTROVOCE www.electrovoce.com

I. IMPORTANT NOTES BEFORE BEGINNING

A. Failure to take ESD precautions could permanently damage the components. ESD damage is permanent and invisible to the naked eye. (Zapped parts are terribly difficult to find once they are assembled into your MIDItools Computer.)

Although it is best to always wear your ESD ground strap while assembling your kit, all assembly steps that require ESD protection are marked with this symbol in the margin.

B. Many components are *polarized.* This means that they must be installed only in the orientation shown on the layout diagram.

All assembly steps that pertain to polarized, or directional, components are marked with
this symbol in the margin. Incorrect orientation can damage components.

C. This manual may make reference to the TOP, BOTTOM, LEFT, or RIGHT sides of the circuit board. These directions correspond to the circuit board held as shown in the layout diagram. In other words, holding the circuit board with the white text markings right side up.

D. The components bodies are installed on the white text side of the circuit board (inside the component outlines). The component leads go through the holes in the circuit board and are soldered on the opposite side.

E. *Integrated circuits (ICs) are not soldered to the circuit board.* Instead, IC sockets are soldered in their place. When solder assembly is finished, ICs are pressed in into the appropriate socket.

II. SET UP YOUR WORK AREA

A. Your work surface should be well lit and well ventilated.

B. Gather your tools: ESD grounding strap; soldering iron; solder (noncorrosive electronics solder); wire cutters; screwdrivers (phillips and pan head); pliers; wire strippers; etc.

C. Prepare ESD grounding protection. A typical ESD ground strap is adequate. Put the strap around your wrist and clip the other end to the head of a slightly-loosened screw of a working, grounded AC outlet plate. The strap will should have an internal 10M ohm (or equivalent) resistor in series to ground. This will safely dissipate any static charge that might otherwise damage your components during assembly and test.

D. Lay out the circuit board and components. Do not remove components from their bags yet. Familiarize yourself with the parts list, layout diagram, and part numbers. Notice that the component bags are marked with the item number found on the parts list. Also, note that the reference designators can be found on the schematic, parts list, and layout diagram.

III. INSTALL THE COMPONENTS

A. Resistors and Jumpers

1. Install **00093** everywhere you see the jumper wire length designation (**----.4----**, **----.6----** or **----.8----)**. There are 14 jumpers on this circuit board. Mount the component bodies flush to the board surface. Solder the leads and trim off the excess.

2. Install **00098** in positions **R1, R4, R7, R10, R13, R14, R15, R16, R17, R18, R19** and **R20**. Solder and trim the leads.

3. Install **00095** in positions **R3**, **R6**, **R9** and **R12**. Solder and trim the leads.

4. Install **00099** in positions **R2, R5, R8** and **R11**. Solder and trim the leads.

B. Diodes

1. Install **00045** in positions **D1, D2, D3** and **D4**. The stripe on the diode body must be on the same side as the shaded end of the diode outline shown on the circuit board. As shown in the layout diagram, all 4 diodes should have their stripe towards the right side of the circuit board. Solder and trim the leads.

C. IC Sockets

1. Install **00068** flush to the circuit board in positions **U1, U2, U3** and **U4**. The notch on the socket body is used to indicate pin 1 of the IC. As shown in the layout diagram, the notch should point towards the top of the circuit board. Solder all 8 socket pins.

2. Install **00071** flush to the circuit board in positions **U5, U6, U7** and **U8**. The notch should point towards the top of the circuit board. Solder all 20 socket pins.

D. Capacitors

1. Install **00089** in positions **C2, C4, C5, C6, C7** and **C8**. Solder and trim the leads.

E. MIDI Connectors

1. Install **00085** in positions **J1, J2, J3, J4, J5, J6, J7** and **J8** so that the open end sticks out from the top edge of the circuit board. Make certain that the connectors are flush with the surface of the circuit board. Solder all 7 terminals.

F. Ribbon Cable

1. Install either end of **00083** flush to the circuit board in the position marked **"EXPANSION" (J5)**. The red wire indicates pin 1 of the ribbon cable. This wire must be aligned with the pin 1 marking dot shown on the circuit board and layout diagram. Solder all 16 connector pins.

G. Integrated Circuits

1. Install **00076** in the sockets for **U1, U2, U3** and **U4**. Align the notch on the IC with the notch on the socket. Place the IC in the socket carefully so as not to damage any leads. Be certain that all IC leads end up in the socket. Push evenly until the IC body rests on the top of the socket. DO NOT SOLDER!

2. Install **00058** in the sockets for **U5, U6, U7** and **U8**. Align the notch on the IC with the notch on the socket. Place the IC in the socket carefully so as not to damage any leads. Be certain that all IC leads end up in the socket. Push evenly until the IC body rests on the top of the socket. DO NOT SOLDER!

H. Mounting Hardware

1. Set the mounting hardware (**00111** washers, **00113** spacers, **00109** nuts, and **00106** screws) aside for now. During the final assembly , you will use these to mount this circuit board in your enclosure -- see the Final Assembly Manual.

2. Set the rear cover (**00053**) and its mounting screws (**00105**) aside as well. If you are going to assemble your computer in PAVO's rackmount enclosure, you will mount this cover to the back of the enclosure during the final assembly steps.

IV. INSPECT YOUR WORK

Before proceeding, take some time to inspect your workmanship. Look for and correct the following potential problems:

- solder that bridges two or more traces
- missed solder joints
- untrimmed leads
- incorrect component orientation
- forgotten parts (did you have any leftover components?)
- ICs not inserted in sockets properly
- ICs not oriented properly
- are all the jumpers installed?

If things look the way they should, you are ready to move on!

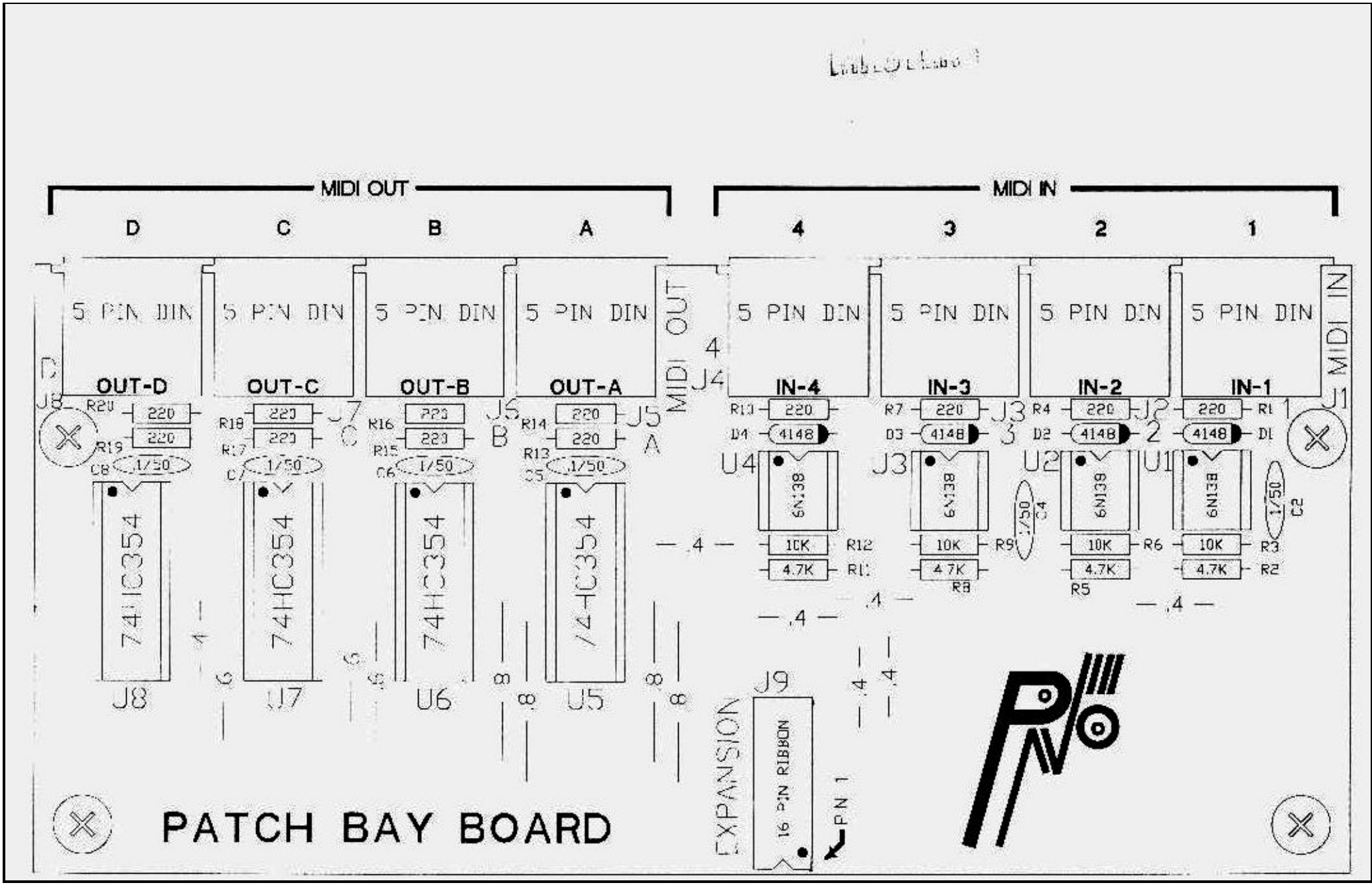
MIDI OUT
MIDI IN
D
C
B
A
4
3
2
1
5 PIN DIN
OUT-D
OUT-C
OUT-B
OUT-A
IN-4
IN-3
IN-2
IN-1
MIDI OUT
MIDI IN
74HC354
6N138
4148
10K
4.7K
1/50
EXPANSION
16 PIN RIBBON
PN 1
PATCH BAY BOARD

MIDItools
PATCH BAY Board
Rev: 1.0
05/01/94

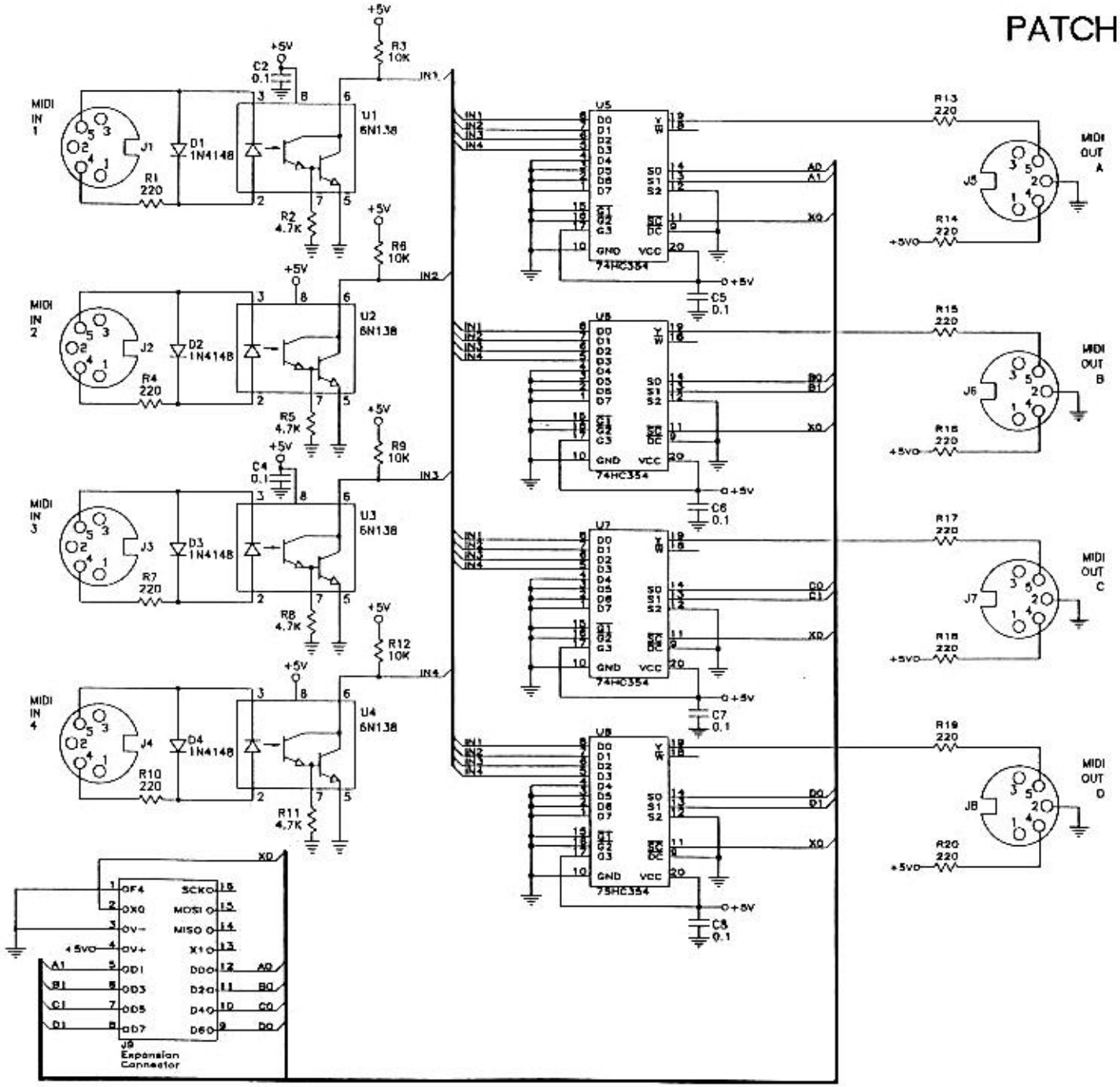

Item 00038 ***Rev*** A

MIDI PATCH BAY BOARD KIT

Line *	Qty	Item Number	Item Class	Item Shape	Item Details	Reference Designator(s)
1	1	00083	CABLE	DIP16	RIBBON, W/2 TIN CONNECTORS, 18"	J9
2	6	00089	CAP	DISC	0.1UF, 50V, CERAMIC	C2,4,5-8
3	8	00085	CONNECTOR	DIN5	MIDI, FEMALE, PCB MOUNT	J1-8
4	4	00068	CONNECTOR	DIP08	SOCKET, IC, TIN	
5	4	00071	CONNECTOR	DIP20	SOCKET, IC, TIN	
6	4	00045	DIODE	DO41	1N4148 SIGNAL	D1-4
7	1	00053	ENCLOSURE	1.1"x7.75"	PATCH BAY REAR COVER	
8	4	00111	HARDWARE	#06	LOCK WASHER, INTERNAL TOOTH	
9	4	00113	HARDWARE	#06	SPACER, CLEAR, ALUM, 1/4"	
10	4	00109	HARDWARE	06-32	HEX NUT	
11	4	00106	HARDWARE	06-32	MACHINE SCREW, PANHEAD, PHILLIPS, 1/2"	
12	2	00105	HARDWARE	06-32	MACHINE SCREW, PANHEAD, PHILLIPS, 1/4"	
13	4	00076	IC	DIP08	6N138 OPTOISOLATOR	U1-4
14	4	00058	IC	DIP20	74HC354 MUX W/ 8 TRI-STATE INPUTS	U5-8
15	1	00127	MANUAL	8.5"x11"	ASSEMBLY, PATCH BAY BOARD	
16	1	00039	PCB	3.0"x6.7"	MIDI PATCH BAY	
17	14	00093	RES	1/4W	0 OHM, JUMPER	
18	4	00095	RES	1/4W	10K OHM, 5%	R3,6,9,12
19	12	00098	RES	1/4W	220 OHM, 5%	R1,4,7,10,13-20
20	4	00099	RES	1/4W	4.7K OHM, 5%	R2,5,8,11